TEST REPORT

REPORT NUMBER: 10787780COQ-001
ORIGINAL ISSUE DATE: September 30, 2014

EVALUATION CENTER

INTERTEK TESTING SERVICES NA LTD.
1500 BRIGANTINE DRIVE
COQUITLAM, BC, V3K 7C1

RENDERED TO

Samhoon Co.,Ltd.
561 Songnae-Dong, Sosa-Gu
BUCHEON CITY 420010
KOREA, SOUTH

PRODUCT EVALUATED:
STEEL DOOR IN PAIRS WITH GLAZED APERTURES

EVALUATION PROPERTY: Air Leakage

Report of steel door in pairs with glazed apertures for the requirements of UL 1784, *Air Leakage Tests of Door Assemblies – July 10, 2009.*

This report is for the exclusive use of Intertek's Client and is provided pursuant to the agreement between Intertek and its Client. Intertek's responsibility and liability are limited to the terms and conditions of the agreement. Intertek assumes no liability to any party, other than to the Client in accordance with the agreement, for any loss, expense or damage occasioned by the use of this report. Only the Client is authorized to copy or distribute this report and then only in its entirety. Any use of the Intertek name or one of its marks for the sale or advertisement of the tested material, product or service must first be approved in writing by Intertek. The observations and test results in this report are relevant only to the sample tested. This report by itself does not imply that the material, product, or service is or has ever been under an Intertek certification program.

1 Table of Contents

1 Table of Contents 2
2 Introduction 3
3 Test Samples 3
3.1. SAMPLE SELECTION 3
3.2. SAMPLE AND ASSEMBLY DESCRIPTION 3
4 Testing and Evaluation Methods 3
4.1. CONDITIONING 3
4.2. CYCLING TEST 3
4.3. AIR LEAKAGE 4
5 Testing and Evaluation Results 5
6 Conclusion 5
Appendix A Air Leakage Data ..... 1 Page
Appendix B Photos ..... 1 Page
Appendix C Drawings ..... 4 Pages

2 Introduction

Intertek Testing Services NA Ltd. (Intertek) has conducted physical testing on a door product for Samhoon Co. Ltd. The testing was carried out in accordance with UL 1784, *Air Leakage Tests of Door Assemblies – 10 July, 2009.* This evaluation was completed during the month of September 2014.

3 Test Samples

3.1. SAMPLE SELECTION

The door arrived at the Evaluation Center on September 24, 2014. Samples were not independently selected for testing.

3.2. SAMPLE AND ASSEMBLY DESCRIPTION

The product was identified as a steel door in pairs with glazed apertures.

Frame: Welded steel frame 1.6mm thick. Dimensions: 150mm depth, 45mm face, 50mm rebate, 16mm door stop, 50mm soffit, 19mm back bend and 112mm throat. Frame came pre-fitted to accept 114mm (~4 ½in.) butt hinges and also anchor bolts through welded bolt guides. Overall frame size: 2390 x 2200mm (w x h). Frame finish was supplied with a primer coat.

Door: Steel door made from 1.2mm thick sheet metal 42.5mm thick filled with insulation within the cavity. Overall size: 1148 x 2155mm (w x h).

Aperture: 6mm tempered glass vision panel with total visible light area of 150 x 800mm (w x h) mounted within and aperture with a metal beading 19.05 x 18.65mm (depth x h) 1.6mm thick with a 19.05mm metal flange for screw fixings. Overall size: 226 x 876mm (w x h).

Additional specimen details can be found in APPENDIX C – Drawings.

4 Testing and Evaluation Methods

4.1. CONDITIONING

Unless otherwise stated, the sample materials were maintained in standard laboratory conditions for a minimum of 24 hours at a temperature of 73 ± 4°F (23 ± 2°C) and relative humidity of 50 ± 5%.

4.2. CYCLING TEST

The cycling test was conducted as per section 6 of UL 1784. Upon completion of the cycling test the same sample was used for air leakage. The test chamber was fitted with a pressure tap to measure the chamber pressure. 9 thermocouples were installed spaced evenly within the test chamber to measure all parts of the test sample. The junction of the thermocouples were placed 6in away from the exposed face of the sample. The temperature and pressure were recorded at intervals not exceeding 5 minutes.

4.3. AIR LEAKAGE

Air leakage was conducted in accordance with Section 7 of UL 1784. The product was installed into a test chamber consisting of a sealed chamber with one open side in which the test sample is installed and sealed. A pressure tap was provided to measure the chamber pressure. An artificial seal was applied to the ungasketed bottom gap of the test sample.

The clearances between the door and the frame were measured at three points along each horizontal and vertical edge. Clearances are outlined in Table 1 below.

Table 1. Clearances Between Door and Frame

Location	Clearances (mm)			Average (mm)
Vertical – Left	1.5	1.6	1.5	**1.566**
Horizontal – Top	**2.66** (avg. of 3)	**2.56** (avg. of 3)	-	**2.61**
Vertical – Right	1.5	1.6	1.6	**1.566**

The test was performed using pressure differentials of 0.05 in. H2O (12.5 Pa), 0.10 in. H2O (25 Pa), 0.20 in. H2O (50 Pa), and 0.30 in. H2O (75 Pa) for both infiltration and exfiltration at ambient and elevated temperatures.

Extraneous chamber leakage rate at ambient was performed first by using a polyethylene sheet to cover the test specimen only. The air flow was then adjusted to the above mentioned pressure differentials. After conditions stabilized, the air flow through the metering system and test pressure difference was measured and recorded. The sheet was then removed and the overall leakage rate was measured and recorded at the specified pressure differentials. The temperature within the test chamber was then adjusted to achieve a temperature of 400 ± 10°F (204 ± 5°C) within 30 minutes. With the temperature stabilized, the overall leakage rate at elevated temperature was measured and recorded at the specified pressure differentials. The system was then allowed to cool and once the specimen surface temperature had returned to within 20°F, the polyethylene sheet was re-applied, and the extraneous chamber leakage was measured and recorded again. Specimen leakage can be calculated as the difference between the overall system leakage and extraneous chamber leakage.

5 Testing and Evaluation Results

The test results for the Samhoon Co. Ltd. door product are shown in Table 2 below. A copy of the data sheets can be found in the Appendices.

Table 2. Samhoon Co. Ltd.

Description	Temperature (°C)	Pressure Differential (Pa)	Away from the seal		Towards the seal	
			(CFM)	CFM/ft²	(CFM)	CFM/ft²
STEEL DOOR IN PAIRS WITH GLAZED APERTURES	23	12.5	7.56	0.13	4.81	0.09
		25	8.25	0.15	6.18	0.11
		50	9.62	0.17	8.25	0.15
		75	10.31	0.18	6.87	0.12
	204	12.5	2.75	0.05	5.50	0.10
		25	6.18	0.11	10.31	*0.18
		50	4.12	0.07	4.12	0.07
		75	6.18	0.11	6.18	0.11

*The maximum air leakage measured at 0.1 in. H2O was 0.18 CFM/ft² at elevated temperatures when the sample was tested with the chamber pressure pushing the door away towards the seals.

6 Conclusion

The Samhoon Co. Ltd. door product identified and evaluated in this report has been tested in accordance with UL 1784, *Air Leakage Tests of Door Assemblies – 10 July, 2009.* The product test results are presented in Section 5 of this report.

INTERTEK TESTING SERVICES NA LTD.

Tested and Reported by:

Vijay Lucas
Technical Analyst – Fire

Reviewed by:

Riccardo DeSantis
Manager, Building Products

VL

APPENDIX A

Air leakage data

Area:	2390	mm Wide x	2200	mm High =	5258000	mm^2
	5.258	m^2	56.59664459	ft^2		

1 m/s = 68.71 CFM; Based on 4 in. Pipe Diameter

Away from Primary Seal

Pressure Differentia (Pa)	Ambient Leakage (m/s)			Elevated Leakage (m/s)			Chamber Leakage After Elevated (m/s)
	Chamber	Overall	Sample	Chamber	Overall	Sample	
12.5	3.41	3.52	0.11	2.38	2.42	0.04	3.16
25	4.20	4.32	0.12	2.80	2.89	0.09	3.80
50	5.57	5.71	0.14	3.36	3.42	0.06	5.42
75	6.95	7.10	0.15	3.64	3.73	0.09	6.40

Pressure Differentia (Pa)	CFM Calculation based on 4 in. Pipe Diameter							
	Chamber Leakage Before		Ambient		Elevated		Chamber Leakage After	
	cfm	cfm/ft^2	cfm	cfm/ft^2	cfm	cfm/ft^2	cfm	cfm/ft^2
12.5	234.30	4.15	7.56	0.13	2.75	0.05	217.12	3.84
25	288.58	5.11	8.25	0.15	6.18	0.11	261.10	4.62
50	382.71	6.77	9.62	0.17	4.12	0.07	372.41	6.59
75	477.53	8.45	10.31	0.18	6.18	0.11	439.74	7.78

Against Primary Seal

Pressure Differentia (Pa)	Ambient Leakage (m/s)			Elevated Leakage (m/s)			Chamber Leakage After Elevated (m/s)
	Chamber	Overall	Sample	Chamber	Overall	Sample	
12.5	3.67	3.74	0.07	3.16	3.24	0.08	3.20
25	4.81	4.90	0.09	3.97	4.12	0.15	3.73
50	7.12	7.24	0.12	5.39	5.45	0.06	4.96
75	9.10	9.20	0.10	6.41	6.50	0.09	6.98

Pressure Differentia (Pa)	CFM Calculation based on 4 in. Pipe Diameter							
	Chamber Leakage Before		Ambient		Elevated		Chamber Leakage After	
	cfm	cfm/ft^2	cfm	cfm/ft^2	cfm	cfm/ft^2	cfm	cfm/ft^2
12.5	252.17	4.46	4.81	0.09	5.50	0.10	219.87	3.89
25	330.50	5.85	6.18	0.11	10.31	0.18	256.29	4.54
50	489.22	8.66	8.25	0.15	4.12	0.07	340.80	6.03
75	625.26	11.07	6.87	0.12	6.18	0.11	479.60	8.49

APPENDIX B
Photos

The test sample during the air leakage tests.
(the sample was tested in the opposite direction after the first air leakage test cycle was complete)

Appendix C
Drawings

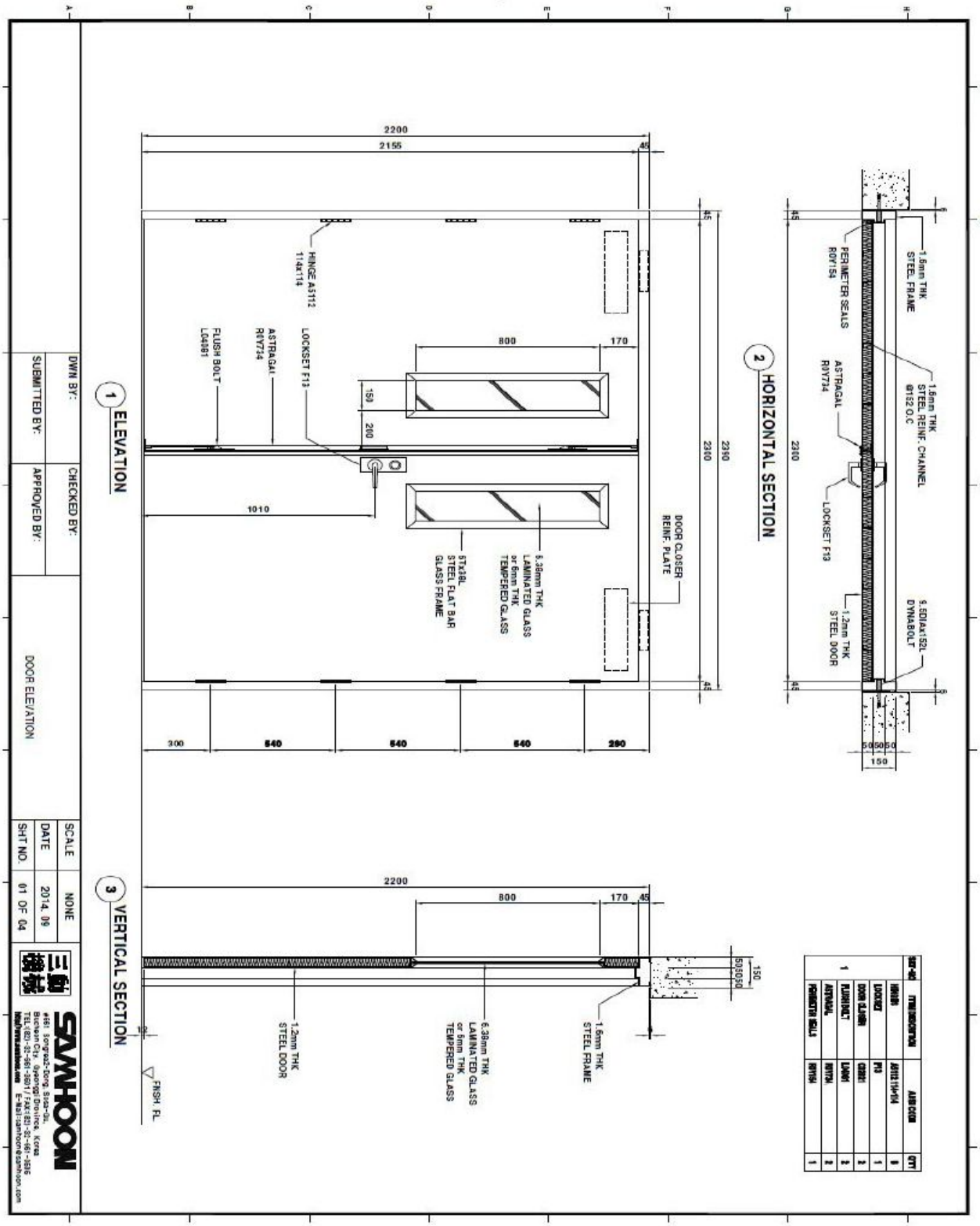

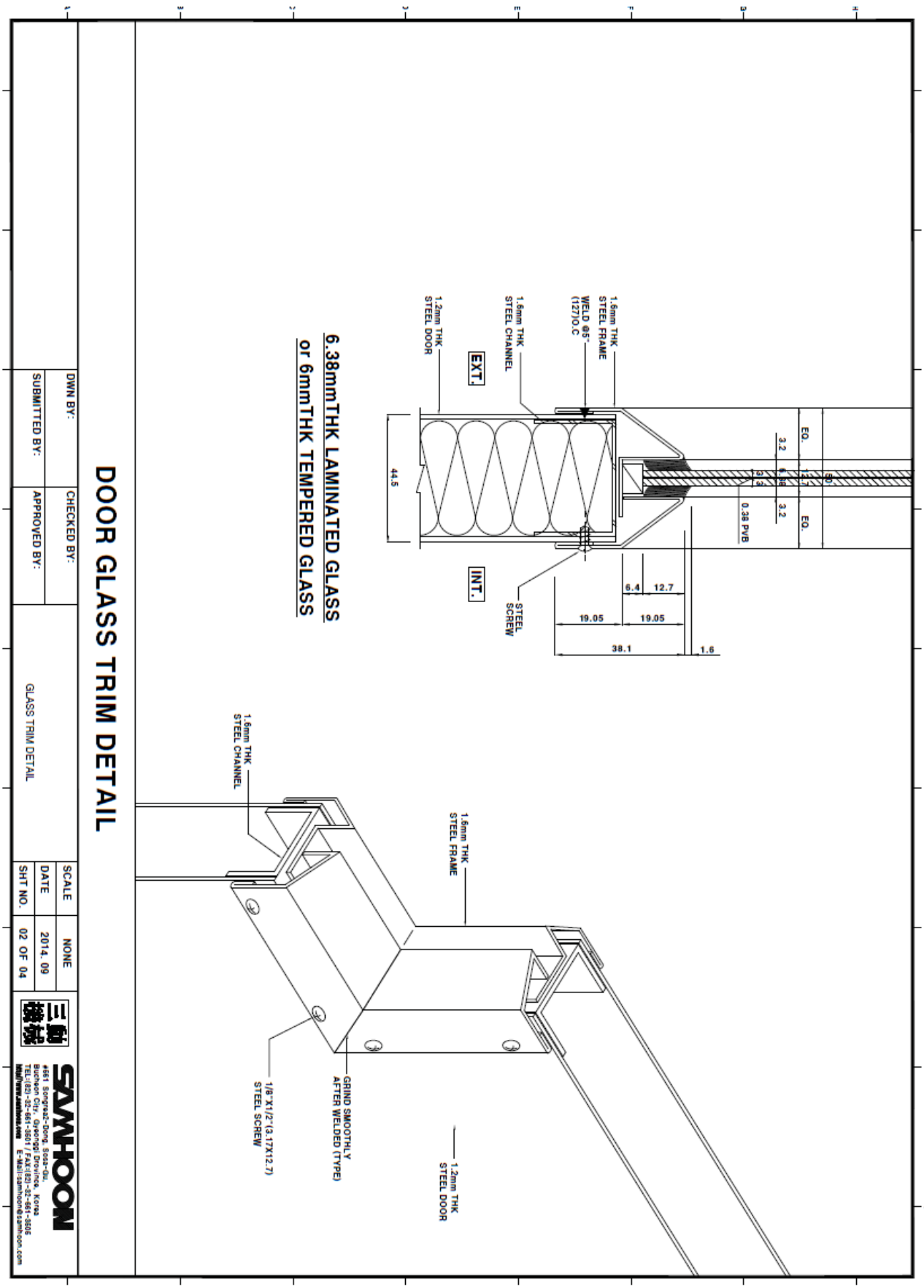
DOOR GLASS TRIM DETAIL
6.38mmTHK LAMINATED GLASS
or 6mmTHK TEMPERED GLASS
EXT.
INT.
1.6mm THK STEEL FRAME
WELD @5" (127)O.C
1.6mm THK STEEL CHANNEL
1.2mm THK STEEL DOOR
STEEL SCREW
44.5
EQ.
3.2
0.38 PVB
6.4
12.7
19.05
38.1
1.6
GRIND SMOOTHLY AFTER WELDED (TYPE)
1/8"X1/2"(3.17X12.7) STEEL SCREW
DWN BY:
CHECKED BY:
SUBMITTED BY:
APPROVED BY:
GLASS TRIM DETAIL
SCALE
NONE
DATE
2014. 09
SHT NO.
02 OF 04
SAMHOON
#661 Songrea2-Dong, Sosa-Gu,
Bucheon City, Gyeonggi Province, Korea
TEL:(82)-32-661-3601 / FAX:(82)-32-661-3606
E-Mail:samhoon@samhoon.com

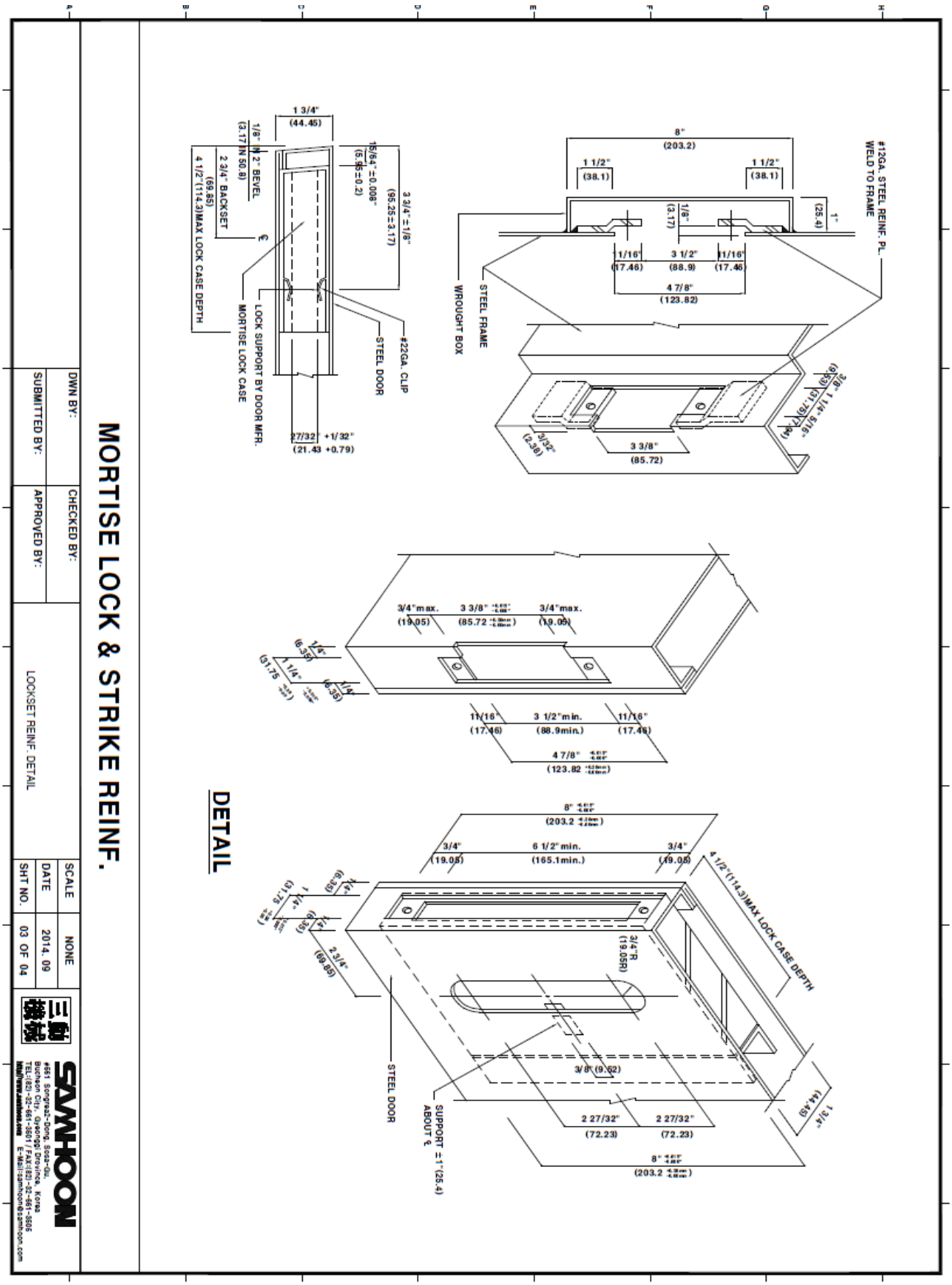
MORTISE LOCK & STRIKE REINF.
DETAIL
DWN BY:
CHECKED BY:
SUBMITTED BY:
APPROVED BY:
LOCKSET REINF. DETAIL
SCALE
NONE
DATE
2014. 09
SHT NO.
03 OF 04
SAMHOON
#120GA. STEEL REINF. PL. WELD TO FRAME
WROUGHT BOX
STEEL FRAME
LOCK SUPPORT BY DOOR MFR.
MORTISE LOCK CASE
STEEL DOOR
#22GA. CLIP
4 1/2"(114.3)MAX LOCK CASE DEPTH
SUPPORT ℄ 1"(25.4) ABOUT ℄

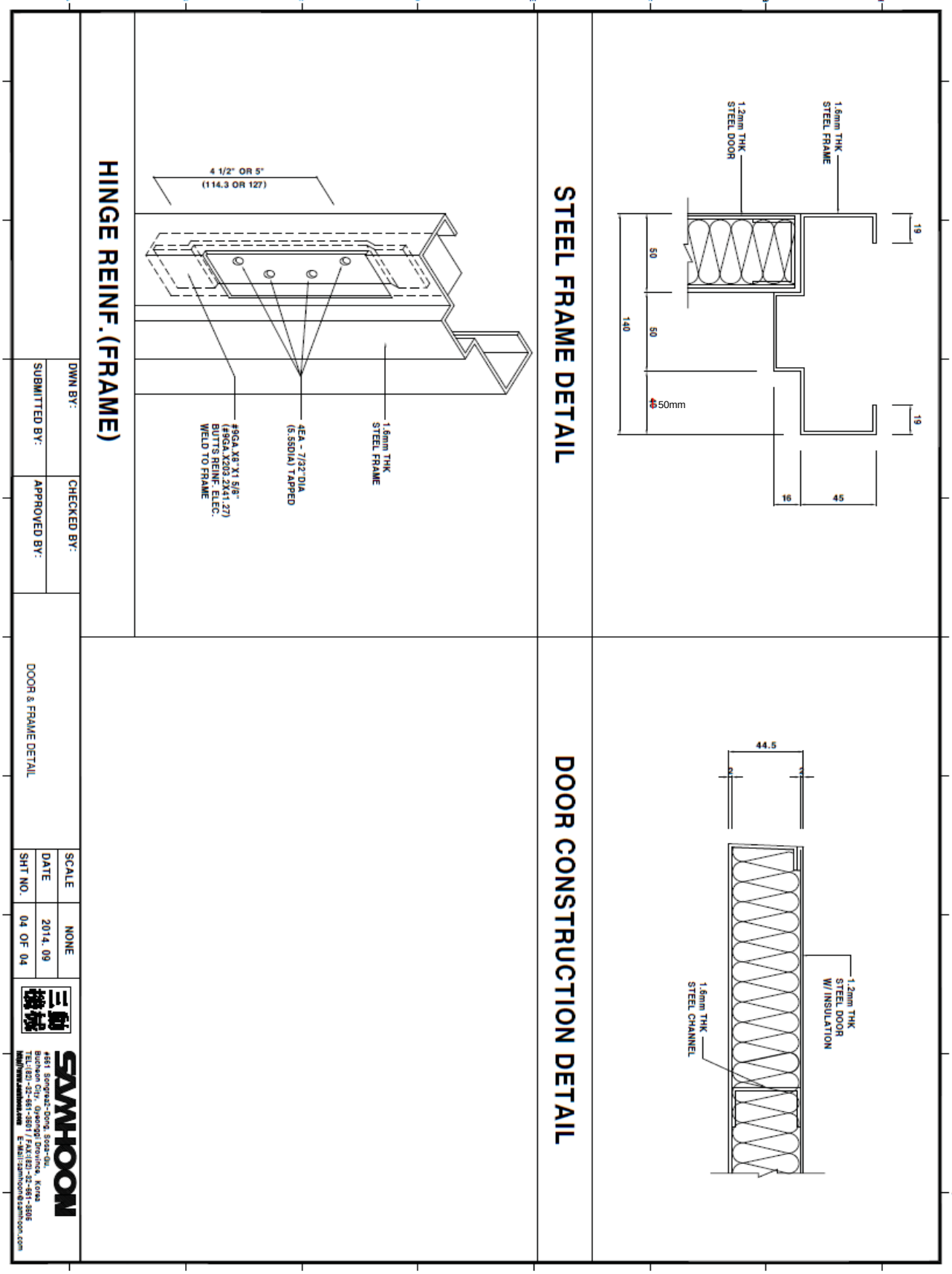
STEEL FRAME DETAIL
1.6mm THK STEEL FRAME
1.2mm THK STEEL DOOR
19
50
50
140
50mm
19
16
45
DOOR CONSTRUCTION DETAIL
44.5
1.2mm THK STEEL DOOR W/ INSULATION
1.6mm THK STEEL CHANNEL
HINGE REINF.(FRAME)
4 1/2" OR 5"
(114.3 OR 127)
1.6mm THK STEEL FRAME
4EA - 7/32"DIA (5.5DIA) TAPPED
#9GA X8"X1 5/8" (#9GA X203.2X41.27) BUTTS REINF. ELEC. WELD TO FRAME
DWN BY:
CHECKED BY:
SUBMITTED BY:
APPROVED BY:
DOOR & FRAME DETAIL
SCALE NONE
DATE 2014. 09
SHT NO. 04 OF 04
SAMHOON
#661 Songnae2-Dong, Sosa-Gu, Bucheon City, Gyeonggi Province, Korea
TEL:(82)-32-661-3801 / FAX:(82)-32-661-3806
Web:www.samhoon.com E-Mail:samhoon@samhoon.com

REVISION SUMMARY:

DATE	PAGE	SUMMARY	INITIAL
September 30, 2014		Original Issue Date	VL